STANDARD DETAIL NOTES:
THIS IS A DIAGRAMMATIC REPRESENTATION AND CERTAIN DETAILS REMOVED FOR CLARITY.
IMPORTANT: ALL DIMENSIONS INDICATED ARE NOMINAL.

IMPORTANT:
THIS DATA IS RELEASED FOR REFERENCE ONLY.

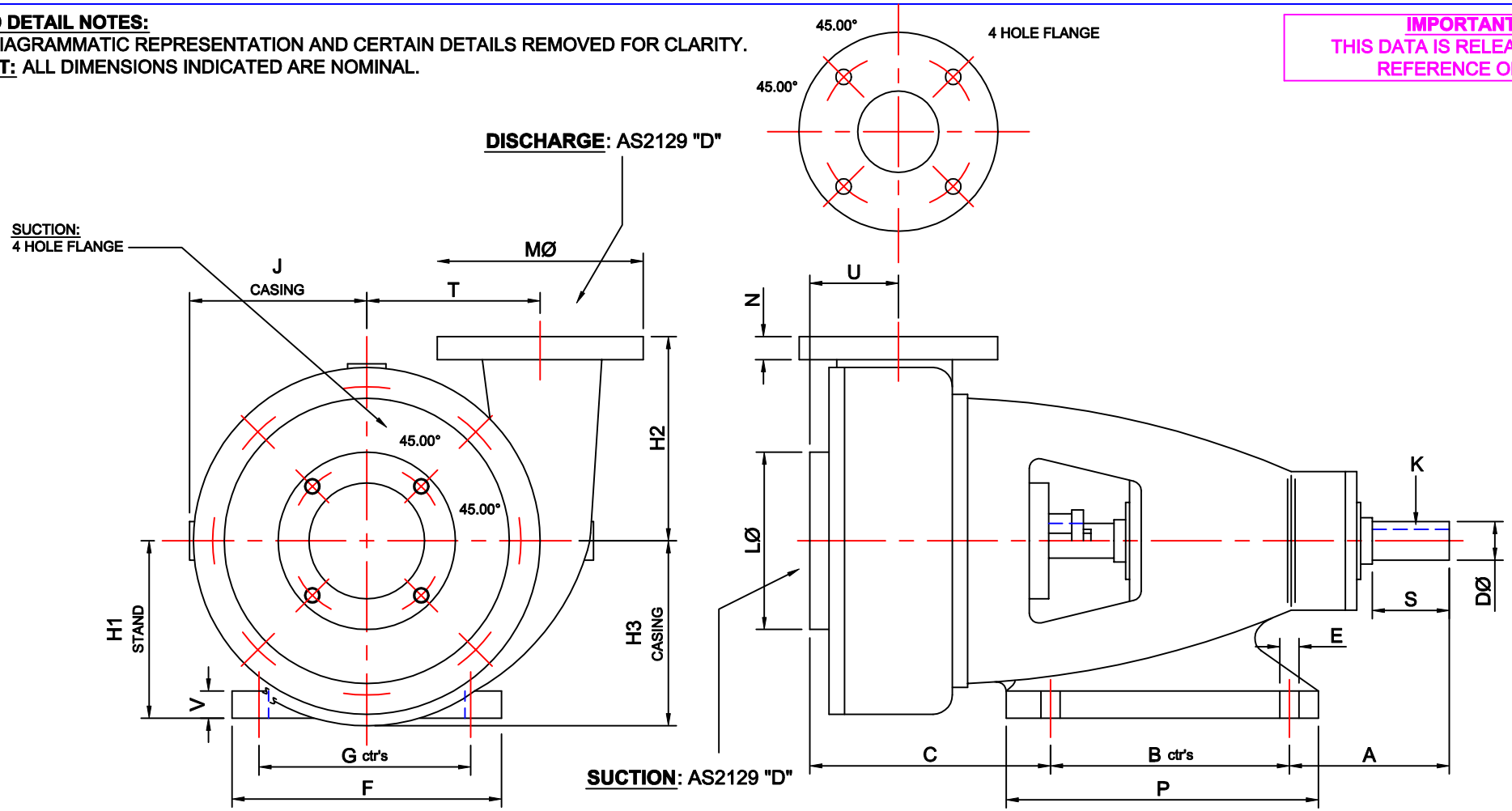

PUMP DIMENSIONS																					
PUMP SIZE	SUCT x DISCH	A	B	C	D	E	F	G	H1	H2	H3	J	K	L	M	N	P	S	T	U	V
50SHL	65 x 50	152	203	167	1 1/4'	21	213	175	163	180	155	156	5/16"	165	150	18	276	64	142	52	36
508	AS 2129 "D"				inch								Sq								
													inch								

REVISION

THIS DATA REMAINS THE PROPERTY OF STALKER ENGINEERING. NO DATA MAY BE REPRODUCED WITHOUT PRIOR CONSENT OF COMPANY. DATA MAY BE ALTERED WITHOUT NOTIFICATION.

AS1100 3rd ANGLE PROJECTION

DO NOT SCALE

GENERAL TOLERANCES
METRIC +/-0.400mm
IMPERIAL +/-0.015"

REFERENCE: ORIGINAL FILE REF. 12/07/2000

APPRVD: CHECKED:

DRWN: AR

DATE: UPDATED 17/04/2003

SCALE: DIAGRAMMATIC

FILE REF: REFER DWG NUMBER

STALKER PUMPS
www.stalkerpumps.com.au

DIMENSION OUTLINE DIAGRAMMATIC
DC 5 SERIES STANDARD

DRAWING No: **3300DCDIMA3**

A3