IMPORTANT:
THIS DATA IS RELEASED FOR REFERENCE ONLY.

STANDARD DETAIL NOTES:
THIS IS A DIAGRAMMATIC REPRESENTATION AND CERTAIN DETAILS REMOVED FOR CLARITY.
IMPORTANT: ALL DIMENSIONS INDICATED ARE NOMINAL.

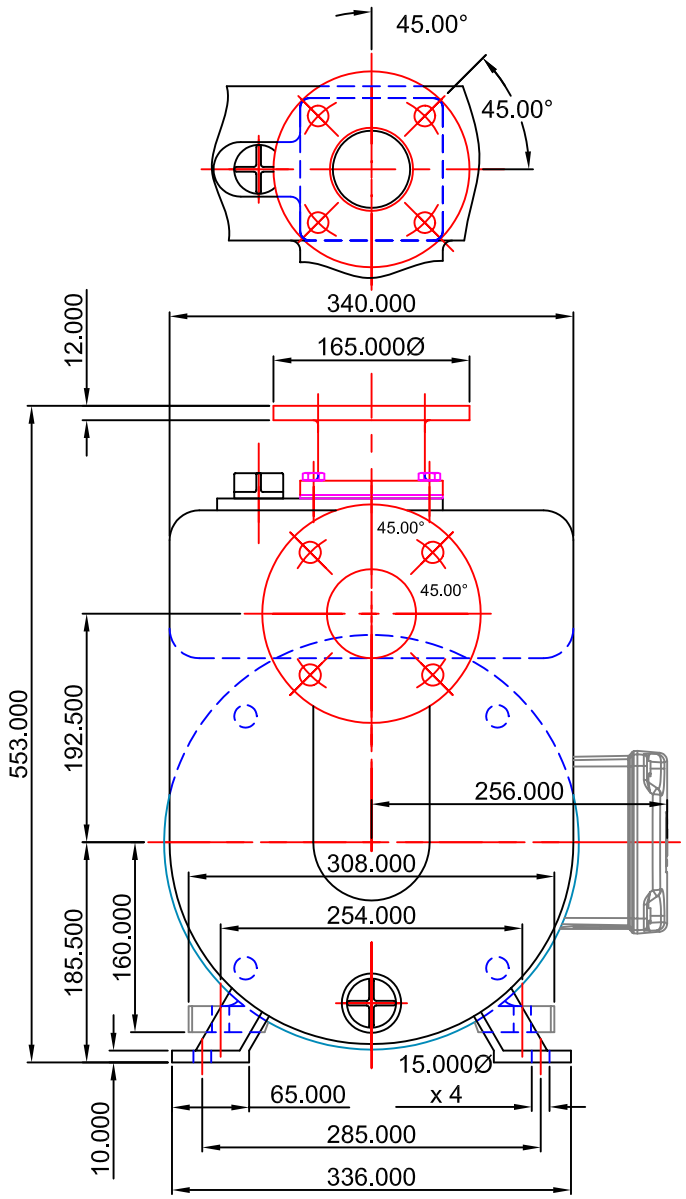

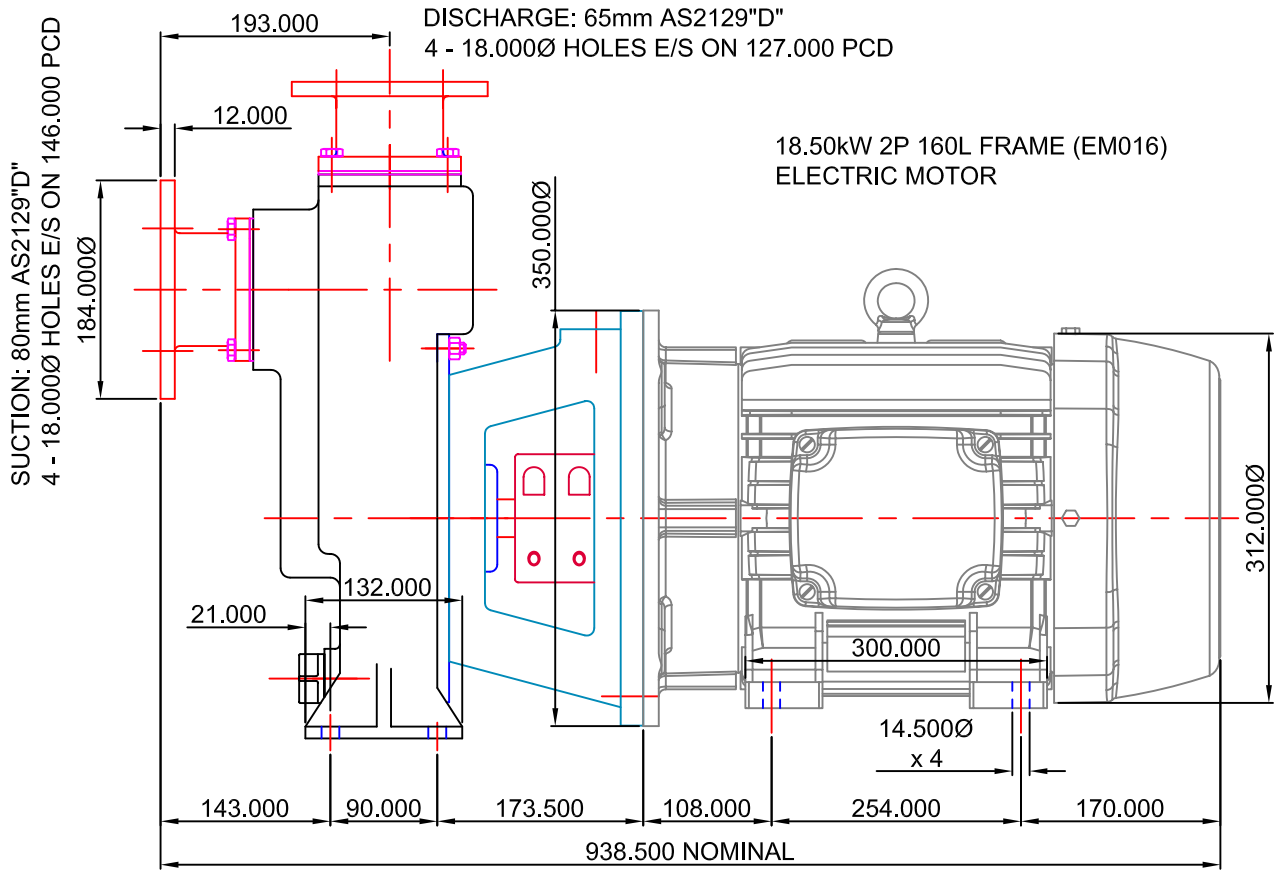

REVISION	REFERENCE: NEW ISSUE 16/04/2007 REPLACES PREVIOUS DWG 4600CC5SERIES2PDIMA3.dwg	THIS DATA REMAINS THE PROPERTY OF STALKER ENGINEERING. NO DATA MAY BE REPRODUCED WITHOUT PRIOR CONSENT OF COMPANY. DATA MAY BE ALTERED WITHOUT NOTIFICATION.	**GENERAL TOLERANCES** METRIC +/-0.400mm IMPERIAL +/-0.015"	DRWN: AR DATE: 16/04/2007	**STALKER PUMPS** www.stalkerpumps.com.au
		AS1100 3rd ANGLE PROJECTION	REFERENCE:	SCALE: DIAGRAMMATIC	DIMENSION OUTLINE DIAGRAMMATIC 65APR CC (M) 5 SERIES MOUNT 18.50kW 2P 160L FRAME ELECTRIC MOTOR DRIVE
		DO NOT SCALE	APPRVD: / CHECKED:	FILE REF: REFER DWG NUMBER	DRAWING No: **4600CC5SERIESEM016DIMA3** — **A3**